SILESIAN UNIVERSITY OF TECHNOLOGY PUBLISHING HOUSE

SCIENTIFIC PAPERS OF SILESIAN UNIVERSITY OF TECHNOLOGY 2026
ORGANIZATION AND MANAGEMENT SERIES NO. 252

ORGANIZATIONAL CULTURE AS A MEDIATOR OF THE IMPACT OF SELECTED TALENT MANAGEMENT PRACTICES ON THE RETENTION OF MEDICAL PERSONNEL IN POLISH HOSPITALS

Wioletta POMARANIK

Warsaw University of Technology, College of Economics and Social Sciences; wioletta.pomaranik@pw.edu.pl, ORCID: 0000-0001-9552-2677

Purpose: The aim of this study was to identify the relationships between selected talent management practices - talent acquisition and talent evaluation - and employee retention among medical personnel in Polish hospitals, and to examine whether organizational culture mediates these relationships.
Design/methodology/approach: Empirical data were collected using a questionnaire survey based on a Likert scale. The study involved 296 medical professionals employed in Polish hospitals. The reliability and convergent validity of the instrument were confirmed (Cronbach's alpha > 0.70; AVE > 0.50). To test the relationships between talent acquisition, talent evaluation, organizational culture, and employee retention, structural equation modeling was conducted using SPSS and AMOS version 31.
Findings: The analysis revealed that both talent acquisition and talent evaluation significantly affect organizational culture in Polish hospitals ($\beta = 0.462$, $p < 0.001$; $\beta = 0.299$, $p = 0.006$, respectively). The direct effect of talent acquisition on employee retention was not statistically significant ($\beta = 0.149$, $p = 0.154$), whereas talent evaluation ($\beta = 0.263$, $p = 0.004$) and organizational culture ($\beta = 0.526$, $p < 0.001$) showed significant direct effects on employee retention. Analysis of indirect effects confirmed the mediating role of organizational culture in the relationships between talent evaluation and employee retention ($\beta = 0.157$, $p = 0.018$) and between talent acquisition and employee retention ($\beta = 0.243$, $p < 0.001$).
Research limitations/implications: The study was conducted exclusively in Polish hospitals, which may limit generalizability to other countries or healthcare sectors. Future research should include diverse types of healthcare institutions and consider contextual factors such as hospital size, staff specialization, and managerial competency levels.
Originality/value: This study provides empirical evidence of the mediating role of organizational culture in the relationships between talent management practices and employee retention among medical personnel in Polish hospitals. The findings indicate that both talent acquisition and talent evaluation influence employee retention through organizational culture. This study offers a valuable foundation for further research on talent management in healthcare and for designing human resource policies that support medical personnel retention.
Keywords: talent management, organizational culture, employee retention, hospitals.
Category of the paper: Research paper.

1. Introduction

In many countries, public healthcare organizations experience persistent crises manifested in high levels of staff turnover, with a substantial proportion of healthcare professionals leaving their jobs each year. This situation is largely driven by demanding working conditions that negatively affect employee well-being. As a result, talent management is increasingly perceived as a critical tool for supporting healthcare personnel, enhancing their well-being, and consequently improving individual performance and the quality of healthcare services provided to patients (Dzimbiri, Molefakgotla, 2021).

The Polish healthcare system faces particularly acute challenges, including a severe shortage of medical personnel, talent drain and migration abroad, declining quality of graduates, insufficient research output, inadequate allocation of public funds, and a weak position in international rankings. These systemic problems have intensified the need to implement effective talent management practices at the national level to restructure approaches to education and talent development, address competency gaps, and secure a qualified workforce for the future (Pomaranik, Kludacz-Alessandri, 2023). Public organizations increasingly recognize that attracting and retaining employees from diverse backgrounds contributes to improved organizational performance and higher quality of medical services, especially given the pivotal role of individual employees in effective public service delivery (Singh Sandhu et al., 2011).

Although talent management has been widely discussed in the private sector, its application in the public healthcare sector remains insufficiently explored. Only a limited number of studies have examined talent management practices in healthcare organizations, despite the critical importance of medical personnel in meeting patient needs and maintaining service quality (Hasanudin, Pratama, 2023). Moreover, existing research indicates a growing awareness of the limited scope and scarcity of empirical studies on talent management in healthcare, particularly from the perspective of employees (Berkery et al., 2023; Dzimbiri, Molefakgotla, 2021; Bibi, 2019).

In response to these research gaps, the aim of this study is to identify the relationships between selected talent management practices - talent acquisition and talent evaluation - and the retention of medical personnel employed in Polish hospitals, as well as to examine whether organizational culture mediates these relationships. Given the persistent difficulties in retaining medical staff, the findings of this study may provide valuable insights for decision-makers responsible for talent management in public healthcare organizations (De Vries et al., 2023).

2. Literature Review

Talent management has become a key concept in organizational research, emphasizing the strategic importance of talented employees as resources that enable organizations to achieve excellence and sustainable competitive advantage through their effective utilization (Meyers, 2016). Two dominant approaches to talent management can be identified in the literature: inclusive and exclusive (Vardi et al., 2023; Yildiz, Esmer, 2023). While the inclusive approach focuses on developing the talents of all employees to enhance overall organizational performance, the exclusive approach concentrates on a selected group of employees considered critical to organizational success (Bermeo, Perez, 2023; Kaliannan et al., 2023).

This study adopts the exclusive approach to talent management, focusing on medical personnel as a strategically important group within healthcare organizations. In the context of hospitals, retaining highly qualified medical professionals is essential due to the direct impact of their work on patient outcomes and service quality. Employee retention is therefore recognized as a key organizational outcome, particularly in sectors characterized by labor shortages and high turnover rates (De Vries et al., 2023).

The study focuses on two talent management practices: talent acquisition (TA) and talent evaluation (TE). The selection of these practices is theoretically grounded in talent-based theory and social identity theory. Talent-based theory posits that human talent constitutes a unique and inimitable resource that enables organizations to compete effectively, highlighting the importance of acquiring, identifying, and retaining talented employees (Rabbi et al., 2015). Social identity theory suggests that employees' identification with the organization is shaped by how they are evaluated and recognized, influencing their attitudes and behaviors, including their intention to remain with the organization (Tajfel, 1982; Tajfel, Turner, 2004; Korostelina, 2007).

Organizational culture is understood as a system of shared assumptions, values, and beliefs developed to address external adaptation and internal integration challenges (Lund, 2003; Limaj, Bernroider, 2019). It plays a crucial role in shaping employees' perceptions, attitudes, and behaviors. In healthcare settings, professionals' perceptions of organizational culture reflect the extent to which organizational values, norms, and practices facilitate cooperation, communication, and professional respect (Tzeng et al., 2002). A culture that supports talented employees, fosters trust, encourages creativity, and promotes positive interpersonal relations can enhance the effectiveness of talent management practices.

Based on the theoretical foundations and prior empirical findings, the following hypotheses are formulated:

H1: Talent acquisition (TA) affects organizational culture (OC).

H2: Talent evaluation (TE) affects organizational culture (OC).

H3: Talent acquisition (TA) affects employee retention (ER).

H4: Talent evaluation (TE) affects employee retention (ER).

H5: Organizational culture (OC) affects employee retention (ER).

H6a: Organizational culture (OC) mediates the relationship between talent evaluation (TE) and employee retention (ER).

H6b: Organizational culture (OC) mediates the relationship between talent acquisition (TA) and employee retention (ER).

The proposed relationships between the study variables are illustrated in Figure 1, which presents the conceptual research model.

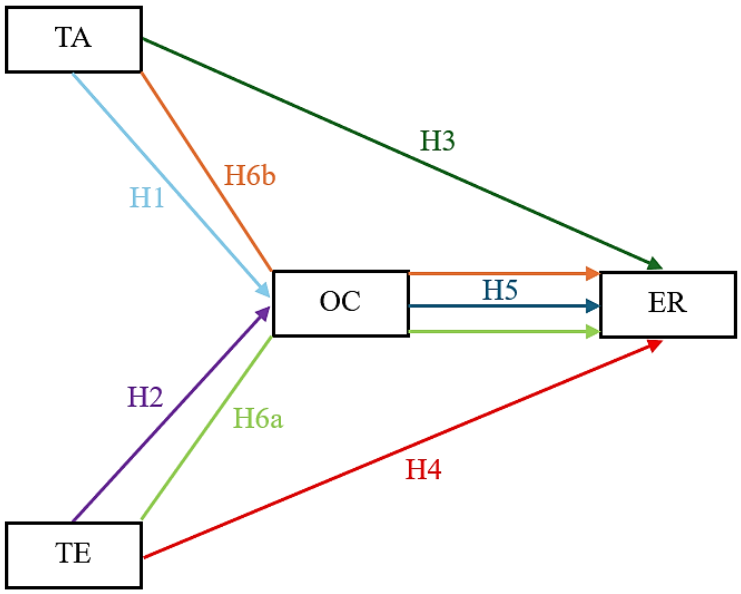

Figure 1. The conceptual research model.

Source: Own elaboration.

3. Methods

The questionnaire used in the study was divided into three parts. Part I included questions to collect information on the characteristics of medical personnel, covering socio-demographic and professional data, such as age, gender, healthcare profession, and tenure with the current employer. Part II focused on assessing respondents' subjective sense of being talented, understood as their self-evaluation of possessing above-average professional competencies, skills, and influence over others in the workplace. Part III contained questions designed to obtain detailed information on the studied constructs, including talent management practices (talent acquisition and talent evaluation), organizational culture, and employee retention. The scale items for all dimensions of the questionnaire were adapted based on a comprehensive review of the relevant literature.

The summary of the items and the corresponding constructs are presented in Table 1. Each item was measured using a 5-point Likert scale, ranging from 1 (strongly disagree) to 5 (strongly agree).

Table 1.
Summary of the items and the corresponding constructs

Construct	Source	Items
Talent Evaluation (TE)	Misztal, 2020; El Dahshan et al., 2018; Behera et al., 2019; Nafei, 2015	TE1: The organization has a transparent and objective way of appraising staff
		TE2: Surveys to evaluate my work are carried out periodically
		TE3: Managers provide feedback to staff-on-staff appraisals carried out
Talent acquisition (TA)	Obeidat et al., 2018; El Dahshan et al., 2018; Groves, 2013	TA1: The organization undertakes long-term human resource planning
		TA2:The reputation of the facility attracts talented medical professionals
		TA3:High-potential employees are identified in the context of our organization's strategic priorities
Organizational culture (OC)	Malathi, Ayisha Millath, 2019; Moczydłowska, 2013	OC1: The facility has a friendly atmosphere
		OC2: The conditions of employment at the facility allow for a work-life balance
		OC3: Managers create a professional atmosphere in which respect is shown to medical personnel
Employee Retention (ER)	Moczydłowska, 2013, Miś, 2020, Malathi, Ayisha Millath, 2019	ER1: I identify with my current employer
		ER2: I would not want to receive a better job offer from a competitor
		ER3: I would not want to test myself in a new environment.

Source: own elaboration based on the sources in the table.

To mitigate potential common method bias, several procedural remedies were employed, including interspersing items from different constructs within the survey instrument and using reverse-coded questions. Furthermore, the presence of common method bias was assessed by conducting Harman's one-factor test. The results indicated that the first factor accounted for 45.85% of the total variance. Therefore, common method bias does not pose a significant concern in this study (Podsakoff et al., 2003).

A survey was conducted among healthcare professionals in Poland to collect research data. Healthcare entities meeting the following criteria were selected for the study: the type of medical activity provided consisted of stationary and round-the-clock hospital care, and the organizational units included hospital wards and other inpatient care units. Healthcare entities meeting these criteria represent a crucial part of the healthcare system in Poland and face considerable challenges in managing medical personnel. The sample was drawn from the Register of Entities Performing Medical Activity, an electronic database maintained in accordance with the Act on Medical Activity in Poland, which contains comprehensive information on all Polish healthcare facilities. Data were collected using Computer-Assisted Web Interviewing (CAWI) and Computer-Assisted Telephone Interviewing (CATI), with identical questionnaires applied in both methods. Furthermore, the study received interest

and support from the Medical Chambers of the following cities: Płock, Wrocław, Lublin, Gdańsk, Koszalin, Kraków, Łódź, Tarnów, Zielona Góra, and Poznań.

Participation was voluntary, and full confidentiality and anonymity were ensured. A total of 296 respondents participated in the study. The collected data were analyzed using IBM SPSS Statistics and IBM SPSS AMOS version 31. Descriptive statistics, scale reliability assessment, confirmatory factor analysis (CFA), path analysis within the structural equation model, and mediation analysis were performed. A significance level of $p < 0.05$ was applied in all analyses.

4. Characteristics of respondents

The study examined several socio-demographic and professional variables to characterize the respondents and assess their suitability for participation. These included gender, age category, healthcare profession, and tenure with the current employer. The results are presented in Table 2.

Table 2.
Socio-demographic characteristics of the study participants

Construct		Frequency (N)	Percent (%)
Gender	Male	59	19.9
	Female	237	80.1
	Total	296	100.0
Age category	Less than 31 years	51	17.2
	Between 31-45 years	60	20.3
	Between 46-60 years	166	56.1
	Above 60 years	19	6.4
	Total	296	100.0
Tenure with current employer (years)	Between 1-5 years	79	26.7
	Between 6-10 years	35	11.8
	Between 11-15 years	23	7.8
	Between 16-25 years	49	16.5
	Above 25 years	110	37.2
	Total	296	100.0
Healthcare profession	Physician	76	25.7
	Nurse	165	55.7
	Midwife	34	11.5
	Other	21	7.1
	Total	296	100.0

Source: Own elaboration.

The majority of surveyed respondents were women (80.1%), aged 46 to 60 years (56.1%), predominantly nurses (55.7%), and more than 25 years of tenure with their current employer (37.2%).

5. Results

The scale reliability results are presented in Table 3. For all tested variables, Cronbach's α was over 0.7, indicating high internal reliability of the scales and measurements.

Table 3.
Scale reliability results

Construct	Items	M	SD	Alpha-Cronbach	KMO (sig. < 0.001)	Factor Analysis (%)
Talent evaluation (TE)	TE1	3.69	1.433	0.888	0.748	82.120
	TE2	3.70	1.508			
	TE3	3.27	1.688			
Talent acquisition (TA)	TA1	3.63	1.413	0.760	0.680	67.576
	TA2	3.50	1.323			
	TA3	3.37	1.410			
Organizational culture (OC)	OC1	3.80	1.254	0.817	0.699	73.916
	OC2	3.60	1.444			
	OC3	3.56	1.506			
Employee retention (ER)	ER1	4.06	1.337	0.828	0.647	74.430
	ER2	3.32	1.580			
	ER3	3.21	1.524			

Note: M – Mean, SD – Standard Deviation, KMO – Kaiser-Meyer-Olkin Measure of Sampling Adequacy.
Source: Own elaboration.

The scales measuring TE, TA, OC, and ER exhibited excellent internal consistency (α = 0.888, α = 0.760, α = 0.817, and α = 0.828, respectively). The Kaiser-Meyer-Olkin (KMO) values indicated adequate sampling adequacy for all dimensions, and factor analysis revealed that each dimension accounted for a substantial proportion of the total variance, ranging from 67.58% to 82.12%.

A confirmatory factor analysis (CFA) was conducted to assess the constructs' validity and test the model fit (see Table 4).

Table 4.
CFA results

Construct	Reliability and convergent validity		Discriminant validity			
	CR	AVE	TA	ER	OC	TE
TA	0.888	0.521	0.722			
ER	0.911	0.590	0.722	0.768		
OC	0.916	0.615	0.697	0.804	0.784	
TE	0.945	0.723	0.786	0.728	0.662	0.851

Note: CR – Composite Reliability, AVE – Average Variance Extracted.
Source: Own elaboration.

The model was examined to assess its reliability, convergent validity, and discriminant validity using IBM SPSS AMOS v. 31. All dimensions demonstrated high composite reliability (CR > 0.7), confirming the consistency of the measurements. The average variance extracted (AVE) for each dimension exceeded the recommended threshold of 0.5 and remained

consistently lower than the respective CR values. Standardized factor loadings for all measured variables surpassed the suggested minimum of 0.5. Collectively, these results provide evidence of convergent validity for the dimensions.

Discriminant validity was evaluated using the Fornell–Larcker criterion, by comparing the square root of each AVE along the main diagonal with the correlation coefficients between dimensions (off-diagonal) in the corresponding rows and columns (Fornell, Larcker, 1981). Minor discrepancies were observed for some dimensions; however, these differences were negligible and can be disregarded (Rahim, Magner, 1995). Overall, the discriminant validity of the measurement model is supported, confirming the distinctiveness of the dimensions. Theoretical validity is considered established when both convergent and discriminant validity are confirmed.

Path analysis was performed as the next step in the research using IBM SPSS AMOS v. 31 to verify the theoretical model and hypotheses. The model was constructed with talent evaluation (TE) and talent acquisition (TA) as the independent variables, organizational culture (OC) as the intermediate variable, and employee retention (ER) as the dependent variable. The final model consists of twelve observable variables and four latent variables.

Several goodness-of-fit indices were examined to assess the adequacy of the proposed structural model. The results indicate that the model demonstrates an acceptable level of fit to the empirical data. The chi-square to degrees of freedom ratio ($\chi^2/df = 3.730$) is below the recommended threshold of 5, indicating an acceptable model fit. Both absolute and incremental fit indices support this assessment. The Goodness-of-Fit Index (GFI = 0.909), Adjusted Goodness-of-Fit Index (AGFI = 0.852), Normed Fit Index (NFI = 0.915), and Comparative Fit Index (CFI = 0.936) all exceed their respective recommended cutoff values, confirming a satisfactory model fit. Additionally, the Standardized Root Mean Square Residual (SRMR = 0.054) is below the recommended maximum value of 0.08, indicating an adequate level of residuals. Overall, the set of fit indices confirms that the proposed structural model provides a good representation of the observed data (Dash, Paul, 2021). A summary of the model-fit indices is presented in Table 5, and the structural model is illustrated in Figure 2.

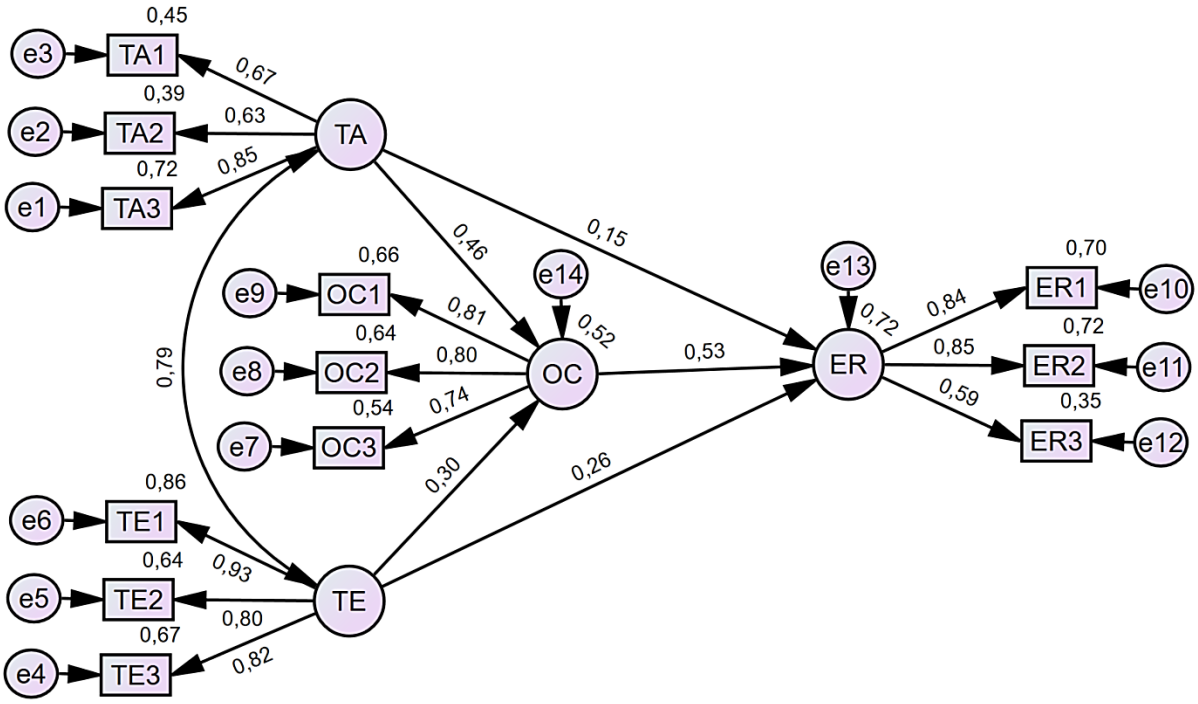

Figure 2. The obtained structural model.

Source: Own elaboration.

Table 5.
Summary of model-fit indices for structural model

Model-fit index	χ2/df	GFI	AGFI	SRMR	CFI	NFI
Results	3.730	0.909	0.852	0.054	0.936	0.915
Acceptable Value	< 5	> 0.9	> 0.85	< 0.08	> 0.9	> 0.9

Note: χ^2 - chi-square test, df - degrees of freedom, GFI - Goodness of Fit, AGFI - Adjusted Goodness of Fit Index, SRMR - Standardized Root Mean Square Residual, CFI - Comparative Fit Index, NFI - Normed Fit Index.

Source: Own elaboration.

The predictors of ER together explain 72% of its variance, demonstrating the model's good explanatory power. The calculated regression coefficients for structural model are presented in Table 6.

Table 6.
Pathway coefficients of structural equation model

Hypothesis	Path	Standardised estimate	S.E.	C.R.	P-value
H1	TA → OC	0.462	0.100	3.930	<0.001
H2	TE → OC	0.299	0.080	2.733	0.006
H3	TA → ER	0.149	0.098	1.425	0.154
H4	TE → ER	0.263	0.074	2.894	0.004
H5	OC → ER	0.526	0.091	6.347	<0.001

Note: S.E. - Standard Error, C.R. - Critical Ratio.

Source: Own elaboration.

The analysis indicated that both talent acquisition and talent evaluation exert a significant impact on organizational culture in Polish hospitals ($\beta = 0.462$, $p < 0.001$ and $\beta = 0.299$, $p = 0.006$, respectively), thereby supporting hypotheses H1 and H2. The direct effect of talent acquisition on employee retention was not statistically significant ($\beta = 0.149$, $p = 0.154$), so hypothesis H3 is not supported. In contrast, talent evaluation ($\beta = 0.263$, $p = 0.004$) and organizational culture ($\beta = 0.526$, $p < 0.001$) demonstrated significant direct effects on retention, confirming hypotheses H4 and H5.

Next, mediation analysis was conducted to examine the indirect effects using bootstrap procedures (5000 samples) with bias-corrected and accelerated 95% confidence intervals. The standardized total, direct, and indirect effects within the structural model are presented in Table 7.

Table 7.
Standardized total, direct and indirect effects within the structural model

Variable	**Total effect**			**Direct effect**			**Indirect effect**		
	TE	**TA**	**OC**	**TE**	**TA**	**OC**	**TE**	**TA**	**OC**
OC	0.299	0.462	0	0.299	0.462	0	0	0	0
ER	0.420	0.392	0.526	0.263	0.149	0.526	0.157	0.243	0
Hypothesis	**Path**			**Indirect effect**	**Standard Error**	**Lower Bound**	**Upper Bound**	**P-value**	
H6a	TE → OC → ER			0.157	0.085	0.025	0.366	0.018	
H6b	TA → OC → ER			0.243	0.088	0.115	0.454	<0.001	

Source: Own elaboration.

The results indicate that organizational culture (OC) mediates the relationships between talent evaluation (TE) and employee retention (ER), as well as between talent acquisition (TA) and ER. The indirect effect of TE on ER via OC was statistically significant ($\beta = 0.157$, SE = 0.085, 95% BCa CI [0.025, 0.366], $p = 0.018$), supporting hypothesis H6a. Likewise, the indirect effect of TA on ER through OC was significant ($\beta = 0.243$, SE = 0.088, 95% BCa CI [0.115, 0.454], $p < 0.001$), confirming hypothesis H6b.

6. Summary

In conclusion, employee retention (ER) in the studied sample is explained both by the direct effects of talent evaluation (TE) and organizational culture (OC), as well as by the indirect effects of talent management practices through organizational culture, indicating full mediation in the case of TA and partial mediation in the case of TE.

Collectively, the predictors included in the model account for 72% of the variance in employee retention, demonstrating the strong explanatory power of the proposed structural model and highlighting the critical role of organizational culture in creating a supportive work environment, which in turn enhances the effectiveness of HR practices in retaining employees.

A limitation of this study is its cross-sectional design and the exclusive focus on hospitals in Poland, which restricts the generalizability of the findings to other types of healthcare organizations or countries. Future research should consider expanding the sample to include diverse healthcare institutions and employing qualitative or longitudinal approaches to enable a more in-depth analysis of the mechanisms linking talent management practices, organizational culture, and employee retention.

References

1. Behera, R.K., Bala, P.K., Dhir, A. (2019). The emerging role of cognitive computing in healthcare: A systematic literature review. *International Journal of Medical Informatics, Vol. 129*, pp. 154-166, doi: 10.1016/j.ijmedinf.2019.04.024
2. Berkery, E. et al. (2023). Developing a talent management framework for domestically and internationally trained nurses and midwives in Healthcare organizations: a mixed- methods research protocol. *Nursing Open, Vol. 10, No. 11*, pp. 7209-7214, doi: 10.1002/nop2.1973
3. Bermeo, J.O., Perez, M.A. (2023). Trends in human talent management of and impact on inclusive organizational culture. *Handbook of Research on Promoting an Inclusive Organizational Culture for Entrepreneurial Sustainability*. IGI Global Scientific Publishing, pp. 241-263, doi: 10.4018/978-1-6684-5216-5.ch013
4. Bibi, M. (2019). Impact of talent management practices on employee performance: an empirical study among healthcare employees. *SEISENSE Journal of Management, Vol. 2, No. 1*, pp. 22-32, doi: 10.33215/sjom.v2i1.83
5. Dahshan, M., Keshk, L., Dorgham, L. (2018). Talent Management and Its Effect on Organization Performance among Nurses at Shebin El-Kom Hospitals. *International Journal of Nursing, Vol. 5, No. 2*. doi: 10.15640/ijn.v5n2a10
6. Dash, G., Paul, J. (2021). CB SEM vs PLS SEM methods for research in social sciences and technology forecasting. *Technological Forecasting and Social Change, Vol. 173*. doi: 10.1016/j.techfore.2021.121092
7. De Vries, N. et al. (2023). The race to retain healthcare workers: a systematic review on factors that impact retention of nurses and physicians in hospitals. *INQUIRY: The Journal of Health Care Organization, Provision, and Financing, Vol. 60*, doi: 10.1177/00469580231159318

8. Dzimbiri, G.L., Molefakgotla, A.M. (2021). Talent management practices: perception of registered nurses in Malawian public hospitals. *African Journal of Economic and Management Studies, Vol. 12, No. 3*, pp. 423-438, doi: 10.1108/AJEMS-11-2020-0570
9. Fornell, C., Larcker, D.F. (1981). Evaluating structural equation models with unobservable variables and measurement error. *Journal of Marketing Research, Vol. 18, No. 1,* pp. 39-50.
10. Groves, K.S. (2013). *Impact of Talent Management Practices on Hospital Clinical, Financial, & Workforce Metrics: Healthcare Talent Management Survey 2013*. Los Angeles: Groves Consulting Group.
11. Hasanudin, H., Pratama, A.Y. (2023). The Effect of Talent Management, Internal Communication and Work Life Balance on Employee Performance Through Employee Satisfaction at PT. Aru Raharja. *Jurnal Manajemen, Kepemimpinan, dan Supervisi Pendidikan, Vol. 8, No. 1*, pp. 587-606, doi: 10.31851/jmksp.v8i1.12940
12. Kaliannan, M. et al. (2023). Inclusive talent development as a key talent management approach: A systematic literature review. *Human resource management review, Vol. 33, No. 1*, doi: 10.1016/j.hrmr.2022.100926
13. Korostelina, K.V. (2007). Social Identity as Social Phenomenon and Scientific Concept. In: *Social Identity and Conflict* (pp. 15-32), doi: 10.1057/9780230605671_2
14. Limaj, E., Bernroider, E.W. (2019). The roles of absorptive capacity and cultural balance for exploratory and exploitative innovation in SMEs. *Journal of Business Research, Vol. 94*, pp. 137-153, doi: 10.1016/j.jbusres.2017.10.052
15. Lund, D.B. (2003). Organizational culture and job satisfaction. *Journal of business & industrial marketing, Vol. 18, No. 3,* pp. 219-236, doi: 10.1108/0885862031047313
16. Malathi, S., Ayisha Millath, M. (2019). Talent Management an Emerging Trend for Employee Effectiveness in Corporate Hospitals. *International Journal of Recent Technology and Engineering (IJRTE), Vol. 8, Iss. 4S5,* doi: 10.35940/ijrte.D1026.1284S519
17. Meyers, M.C. (2016). Talent management: Towards a more inclusive understanding, *Tijdschrift voor HRM, Vol. 12*, pp. 1-12.
18. Miś, A. (2020). *Zarządzanie talentami w polskich organizacjach, architektura systemu*. Warszawa: Wolters Kluwer.
19. Misztal, M. (2020). Wpływ procesów zarządczych na poziom zaangażowania pielęgniarek w pracę. *Współczesne Pielęgniarstwo i Ochrona Zdrowia, t. 9, nr 1-4.*
20. Moczydłowska, J.M. (2013). Błędy w zarządzaniu relacjami z pracownikami jako wewnętrzne źródło kryzysu w organizacji. In: S. Partycki (Ed.), *Strategie działań w warunkach kryzysu*, Lublin: Wydawnictwo KUL.
21. Nafei, W.A. (2015). Talent management and health service quality from the employee perspective: A study on teaching hospitals in Egypt. *American International Journal of Social Science, Vol. 4*, *No. 1*, pp. 91-110.

22. Obeidat, B., Yassin, H., Masa'Deh, R. (2018). The Effect of Talent Management on Organizational Effectiveness in Healthcare Sector. *Modern Applied Science, Vol. 12, No. 11*, doi; 10.5539/mas.v12n11p55
23. Podsakoff, P.M. et al. (2003). Common method biases in behavioral research: A critical review of the literature and recommended remedies. *Journal of Applied Psychology, Vol. 88, No. 5*, pp. 879-903, doi: 10.1037/0021-9010.88.5.879
24. Pomaranik, W., Kludacz-Alessandri, M. (2023). Talent management and job satisfaction of medical personnel in Polish healthcare entities. *Frontiers in Psychology, Vol. 14,* doi: 10.3389/fpsyg.2023.1146073
25. Rabbi, F. et al. (2015). Talent management as a source of competitive advantage. *Journal of Asian business strategy, Vol. 5, No. 9,* doi: 10.18488/journal.1006/2015.5.9/1006.9.208.214
26. Rahim, M.A., Magner, N.R. (1995). Confirmatory factor analysis of the styles of handling interpersonal conflict: First-order factor model and its invariance across groups. *Journal of Applied Psychology, Vol. 80, No. 1*, pp. 122-132.
27. Singh Sandhu, M. et al. (2011). Knowledge sharing among public sector employees: evidence from Malaysia. *International Journal of Public Sector Management, Vol. 24, No. 3*, pp. 206-226, doi: 10.1108/09513551111121347
28. Tajfel, H. (1982). Social Psychology of Intergroup Relations. *Annual Review of Psychology, Vol. 33, No. 1,* pp. 1-39.
29. Tajfel, H., Turner, J.C. (2004). The social identity theory of intergroup behavior. *Political Psychology.* Psychology Press, pp. 276-293.
30. Tzeng, H.M., Ketefian, S., Redman, R.W. (2002). Relationship of nurses' assessment of organizational culture, job satisfaction, and patient satisfaction with nursing care. *International Journal of Nursing Studies, Vol. 39, No. 1*, doi: 10.1016/s0020-7489(00)00121-8
31. Vardi, S., Collings, D.G. (2023). What's in a name? talent: A review and research agenda. *Human Resource Management Journal, Vol. 33, No. 3*, pp. 660-682, doi: 10.1111/1748-8583.12500
32. Yildiz, R.O., Esmer, S. (2023). Talent management strategies and functions: a systematic review. *Industrial and Commercial Training, Vol. 55, No. 1*, pp. 93-111, doi: 10.1108/ICT-01-2022-0007